ASKO

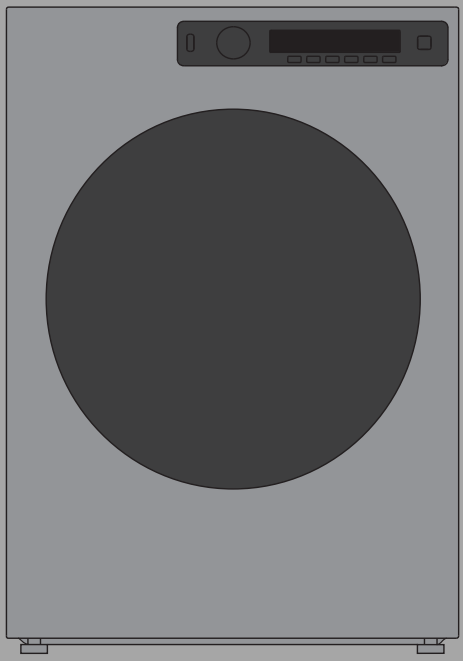

USER MANUAL
Tumble dryer
EN

TD85.C18X
TDC148XV

Carefully read the instructions for use before using the dryer.

Contents

Introduction **3**
Safety precautions **4**
Dryer description **10**
Before using the appliance for the first time **11**
Installation and connection **12**
Advices before drying **27**
Drying process, step by step **30**
Settings **35**
Cleaning and maintenance **37**
Errors – what to do? **40**
Service **44**
Right to Repair 45
Technical information **46**
Program chart **47**
Removal **49**
Disposal / recycling of packaging 49
Quick guide **50**

Dear Customer,

We thank you for purchasing this quality ASKO product.

We hope it meets all your expectations. Scandinavian design combines pure lines, everyday functionality, and high quality. These are the key characteristics of all our products, and the reason why they are highly appreciated across the globe.

We kindly recommend you to read these instructions before using the appliance for the first time. The instruction manual also includes information on how you can help protect the environment.

The following symbols are used throughout the manual and they have the following meanings:

INFORMATION!

Information, advice, tip, or recommendation

WARNING!

Warning – general danger

ELECTRIC SHOCK!

Warning – danger of electric shock

HOT SURFACE!

Warning – danger of hot surface

DANGER OF FIRE!

Warning – danger of fire

Original instructions

See Quick guide on the last page.

General
Please read the instruction manual and save it for future reference.

- **Please do not use the tumble dryer if you have not read and understood these instructions or use first.**
- This appliance is not intended for use by persons (including children) with reduced physical, sensory or mental capabilities, or lack of experience and knowledge, unless they have been given supervision or instruction concerning use of the appliance by a person responsible for their safety.
- Failure to observe the instructions for use or inappropriate use of the tumble dryer may result in damage to the laundry or appliance, or injury to the user.
- Instructions for use are available on our website at www.asko.com.
- Appliance is intended to be used in an area open to the public.
- Before connecting the dryer to the power mains, please read carefully the instructions for use that describe the dryer and its correct and safe use. The instructions apply to several appliance types or models; thus, settings or equipment may be described herein which is not available in your dryer.
- Leave any repairs and similar tasks on the dryer to an expert. Unprofessional repair may result in an accident or major malfunction.
- After installation, the dryer should stand still for two hours before it is connected to the power mains.
- At least two persons are required to install the tumble dryer on top of a washing machine.
- The dryer shall not be connected to the power mains using an extension cord.
- Do not connect the tumble dryer to an electrical outlet intended for an electric shaver or hair dryer.

⚠ WARNING!

If the power cord is damaged, it has to be replaced by the manufacturer, an authorized service technician, or a similarly qualified person, in order to avoid any hazards.

- ⚠ WARNING!

  The appliance shall not be supplied through an external switching device, such as a timer, or connected to a circuit that is regularly switched on and off by a utility.

- **After the drying process, unplug the dryer power cord from the power outlet.**

  If you have a tumble dryer with a 3-phase connection, do not pull the plug out of the power outlet.
- The appliance shall be disconnected from the power source during servicing and replacement of parts. Removal of the plug has to be such, that an operator can check, from any of the points to which he has access that the plug remains removed.
- In case of incorrect appliance connection, incorrect use, or servicing by an unauthorized person, the user shall bear the cost of any damage.
- Air in the dryer environment should not contain dust particles. The air where the dryer is installed should be thoroughly ventilated to prevent reverse flow of gases released from the gas appliances with open fire (e.g. fireplaces).
- Do not evacuate the air from the dryer through channels used for appliances or devices that use natural gas or other fuels for their operation (only applies to the evacuation dryer).
- Clean the door net filter after each drying cycle.
- Do not dry unwashed laundry in the dryer.
- Items that have been soiled with substances such as cooking oil, acetone, alcohol, petrol, kerosene, spot removers, turpentine,

waxes and wax removers should be washed in hot water with an extra amount of detergent before being dried in the tumble dryer.

- Clothing that includes latex, rubber parts, shower and bathing caps, and laundry or covers with rubber foam shall not be dried in the dryer.
- Fabric softeners, or similar products, should be used as specified by the fabric softener instructions.
- Do not use any solvents, abrasive cleaners, glass cleaners, or all-purpose cleaners.
- The appliance must not be installed behind a lockable door, a sliding door or a door with a hinge on the opposite side to that of the tumble dryer, in such a way that a full opening of the tumble dryer door is restricted.
- Never block the air vents.
- For appliances with ventilation openings in the base, a carpet must not obstruct the openings.
- The air in the room where the dryer is installed may not contain dust particles.
- The lint must not to be allowed to accumulate around the tumble dryer.
- ⚠ DANGER OF FIRE!

  Remove all objects from pockets such as lighters and matches.
- After installation, wait for 24 hours before using the appliance. If the dryer has to be laid down on one of the sides during transport or servicing, place it with its left side, viewing from the appliance front, downwards (only applies to dryers with a heat pump).
- The appliance shall not be in contact with a wall or adjacent furniture.
- If the dryer is connected to an air exhaust system already used for another appliance, a non-return valve must be installed. Reverse flow into the dryer could damage the appliance, and the non-return valve prevents such reverse flow (only applies to the evacuation dryer).

- A float will switch off the appliance if the condensed water pipe is clogged or if there is a risk of overflowing of the condensed water accumulated in the condensed water tank (only applies to the evacuation dryer).
- If you wish to move the dryer or store it in a non-heated room during winter, it is essential that you first empty the condensed water tank (only applies to the condenser dryers and dryers with a heat pump).
- Maximum drying capacity in kg is indicated on the rating plate.

Safety

- ⚠ DANGER OF FIRE!

  Only use the dryer to dry laundry that was washed with water. Do not dry any laundry that was washed or cleaned with flammable cleaners or substances (such as gasoline, trichloroethylene etc.) as this may result in an explosion.

- If you have cleaned your clothes with industrial cleaners or chemical substances, do not dry them in the dryer.
- If the air exhaust hose is connected to an opening in the wall, influx of cool air may be prevented by installing a ventilation grille. (Only applies to evacuation dryer.) .
- The air exhaust hose shall not be connected to an active chimney used to evacuate smoke or waste gases; into a shaft intended for ventilating rooms with combustion equipment; or into a chimney used by third parties. If smoke or waste gases return to the room where the dryer is installed, there is a danger of poisoning (only applies to evacuation dryer).
- The dryer is protected with an automatic switch-off system in case of overheating. The system switches off the heater if the temperature is too high (only applies to evacuation and condenser dryer).
- If the net filter is clogged, the automatic heater switch-off device can be triggered. See chapter "CLEANING AND MAINTENANCE" (only applies to evacuation and condenser dryer).

- ⚠ HOT SURFACE!

  WARNING! The back of the dryer may get very hot during operation. Wait for the dryer to cool down completely before touching its back side. (Observe the instructions in the chapter "INSTALLATION AND CONNECTION")

- ⚠ HOT SURFACE!

  Never stop a drying cycle or do not open the door before the end of the program. If you do so for any reason, be careful when taking the laundry from the drum as it can still be very hot and there is a risk of burning.

  Quickly remove the laundry from the drum and spread it to allow it to cool down as quickly as possible.

Child safety

- **Children should be supervised to ensure that they do not play with the appliance.**
- **Children of less than 3 years should be kept away unless continuously supervised.**
- Prevent your children and pets from entering the dryer drum.
- Before closing the dryer door and running the program, make sure there is nothing except laundry in the drum (e.g. if a child climbed into the dryer drum and closed the door from the inside).
- **Activate the child lock.** See chapter: SETTINGS
- **The dryer is made in compliance with all relevant safety standards.**
- This appliance can be used by children aged from 8 years and above and persons with reduced physical, sensory or mental capabilities or lack of experience and knowledge if they have been given supervision or instruction concerning use of the appliance in a safe way and understand the hazards involved.
- Children shall not play with the appliance.

- Cleaning and user maintenance shall not be made by children without supervision.

SAVE THESE INSTRUCTIONS FOR FUTURE REFERENCE!

Dryer description

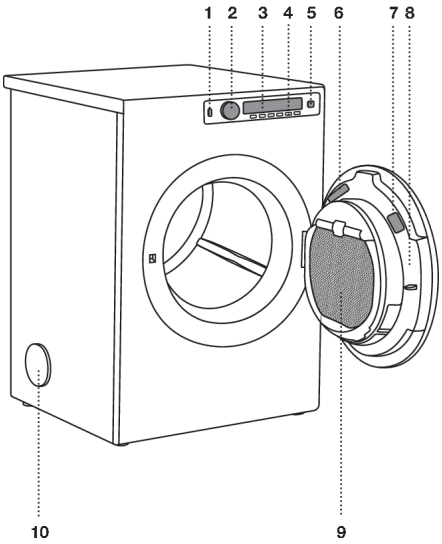

1. Main switch (ON/OFF)
2. Program selector knob
3. Display unit
4. Program settings buttons
5. Button (start/pause)
6. Rating plate with information about the dryer (on the inside of the drying machine door)
7. QR and AUID code (on the inside of the drying machine door)
8. Dryer door
9. Door net filter
10. Air exhaust hose opening

Packaging
Remove all packaging.

Please sort the materials in compliance with local recommendations (see chapter "Disposal").

Cleaning
Disconnect the dryer from the power mains and open the door towards you. Before using the dryer for the first time, clean the dryer drum using a soft damp cotton cloth and water.

In the case of a 3 phase connection of the appliance, switch off the main socket switch.

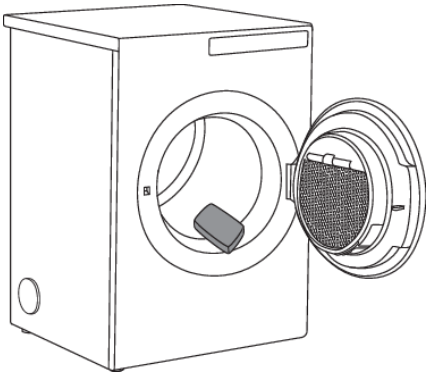

INFORMATION!

No programme can be started while the door is open.

Choosing the language
When the dryer is connected (see chapter "Installation and connection") and switched on for the first time, choose the preferred language.

For further drying process, see chapter "DRYING PROCESS, STEP BY STEP".

INFORMATION!

When you run the dryer for the first time, or if the dryer has been out of use for a long time, slight hitting noise may appear. This is normal and it will disappear after a few drying cycles.

Dryer placement

The dryer can be either free standing or installed on top of a washing machine.

INFORMATION!

At least two persons are required to install the tumble dryer on top of a washing machine.

The dryer emits heat. Therefore, do not place it in a very small room, as the drying process may be longer due to limited amount of ambient air.

INFORMATION!

Do not place the dryer in a room where temperature can drop below 0 °C, as the machine may not operate correctly at such low temperatures, or freeze, which in turn can result in damage to the machine.

For optimum dryer operation, install it in a room with adequate ventilation and a temperature between 15 °C and 25 °C.

WARNING!

The appliance must not be installed behind a lockable door, a sliding door or a door with a hinge on the opposite side to that of the tumble dryer, in such a way that a full opening of the tumble dryer door is restricted.

INFORMATION!

Never block the air vents.

WARNING!

For appliances with ventilation openings in the base, a carpet must not obstruct the openings.

INFORMATION!

If the appliance is installed on a plinth or a similar structure, then the appliance must be fixed to it, to avoid the risk of falling. ASKO original accessories are available for this purpose, complete with fixing instructions.

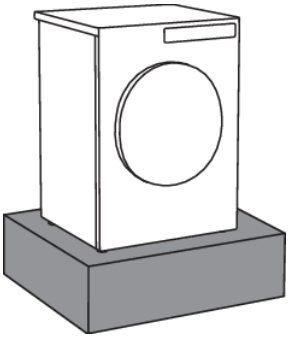

Free-standing appliance

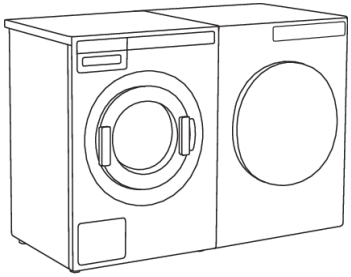

The dryer may be placed adjacent to a washing machine.

If the friction between the dryer feet and the floor is not sufficient, the dryer may move during operation. To prevent sliding, use a non-slide mat or install the supplied vacuum feet onto both front feet.

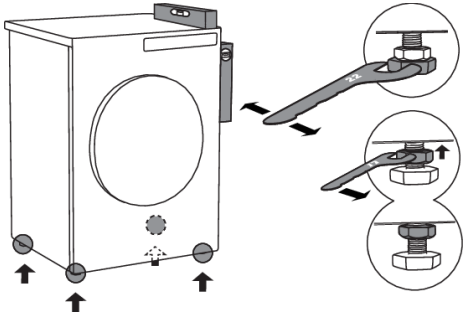

Place the dryer so that it is stable. Use a spirit level to level the dryer in longitudinal and traverse direction by rotating the adjustable feet using a No. 22 spanner (max. 15 mm). Then, firmly tighten the jam nuts (counter nuts) by rotating them towards the appliance bottom using a No. 17 spanner ⬆.

Clearance around the dryer for optimum operation

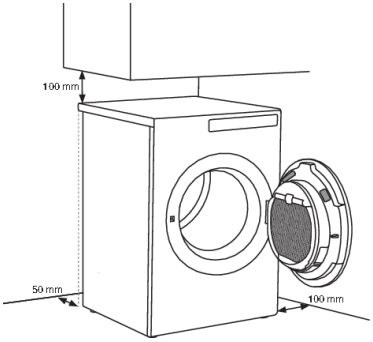

INFORMATION!

The dryer shall not be in contact with a wall or adjacent furniture. For optimum dryer operation, we recommend observing the clearance from the walls as indicated in the figure.

Opening the dryer door (top view)

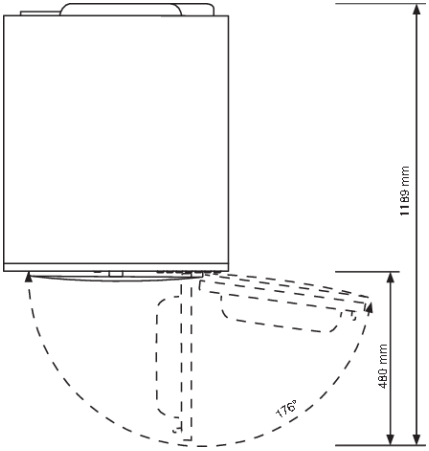

Stacking on top of a washing machine

To stack the dryer on top of a washing machine, use the extra vacuum feet and the tipping guard (A+B), supplied in the cardboard box in the dryer drum. Tipping guard part B is designed to fit on ASKO washing machines and it may be hard or impossible to mount on appliances of other brands. If the washing machine and dryer are not of matching dimensions or if you have installed a hidden helper between the two appliances, then binding plates are available as optional accessories at the service center (… available only for HH (acessory Hidden Helpers) and TD75 stacked on top of WM80 or WM85; not intended for any other combinations).

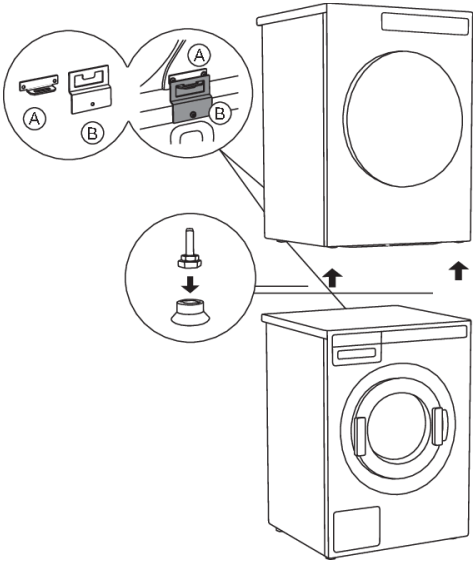

All ASKO washing machines can bear the weight of the dryer.

INFORMATION!

Washing machine on which you wish to install the dryer must be able to bear the weight of the dryer (see washing machine's rating plate or technical information).

How to stack a dryer onto the washing machine (ASKO):

There is a cardboard box in the dryer drum, containing the vacuum feet and the tipping guard.

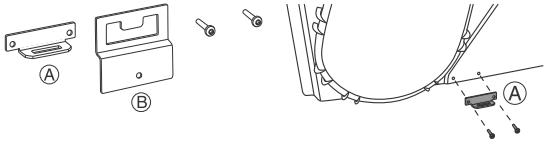

1

The tipping guard consists of two metal parts (A + B).

Use two screws to attach the A part to the back of the dryer.

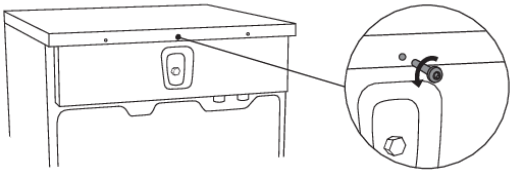

2

Undo the screw on the back side of the washing machine.

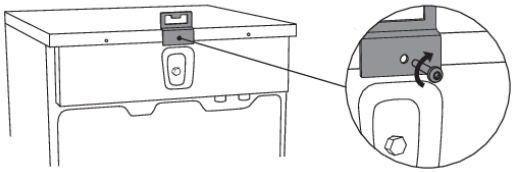

3

Use the screw to attach the tipping guard (B part) to the back of the washing machine.

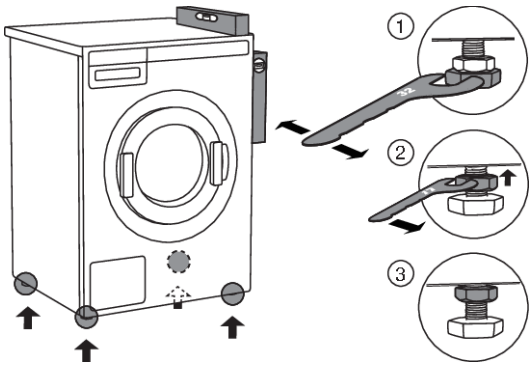

4

Level the washing machine so that it is stable.

1. Level the washing machine in longitudinal and traverse direction by rotating the adjustable feet using a No. 32 spanner. The feet allow levelling by +/- 1 cm.
2. After adjusting the height of the feet, firmly tighten the jam nuts (counter nuts) using a spanner No 17, by turning them towards the bottom of the washing machine ⬆.
3. Tighten the jam nuts (counter nuts).

Table continued from last page

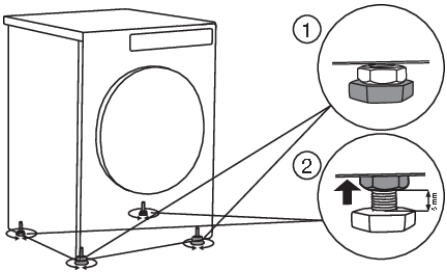

5

Set the dryer feet:

1. Tighten the front two feet all the way in.
2. Undo the back feet by 3.5 turns or 5 mm; then, fasten the jam nuts towards the bottom of the appliance ⬆.

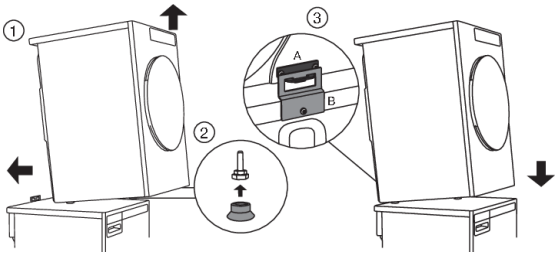

6

Place the dryer onto the washing machine:

1. Lift the front part of the dryer by 5 to 10 cm.
2. Attach the vacuum feet onto the front feet of the dryer.
3. Push the dryer into the tipping guard (so that the B part is inserted into the A part) and release it (See figure on previous page).

INFORMATION!

Make sure the tipping guard is "locked"!

Changing the door opening direction

To change the direction of door opening, proceed as follows:

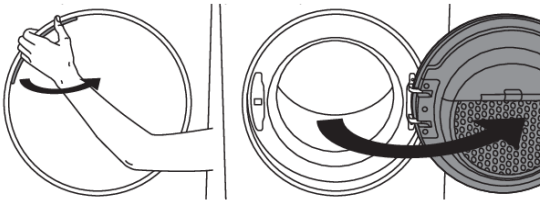

1

Open the door fully.

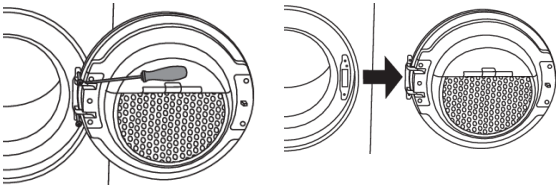

2

Undo the screws and remove the door.

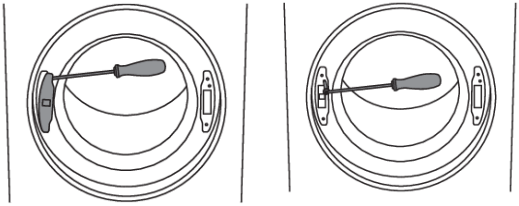

3

Use a screwdriver to remove the door lock cover and undo the screw on the door lock.

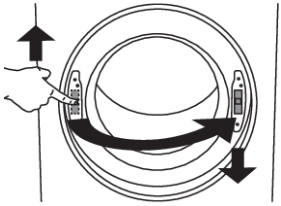

4

Push the door lock upwards and remove it. Move it to the other side and push it downwards.

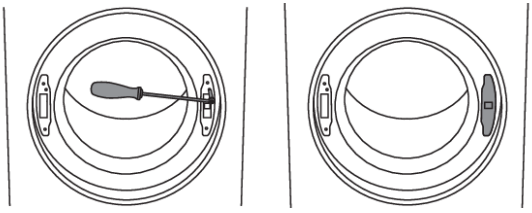

5

Fasten the screw on the door lock. Replace the door lock cover.



6

Undo the door hinge assembly (left) and the door latch assembly (right), switch their positions, and replace the screws (door hinge assembly to the right-hand side, door latch assembly to the left-hand side).

INFORMATION!

Use a screwdriver to remove the plastic part more easily.

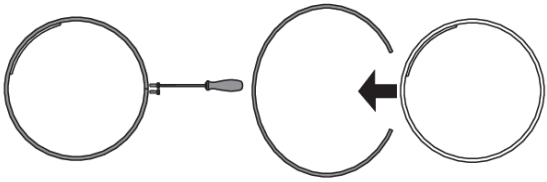

7

Undo the door ring and remove it temporarily.

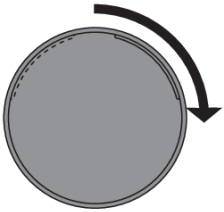

8

Rotate the door cover by 90°so that the sign indicating the opening of the door is on the other side.

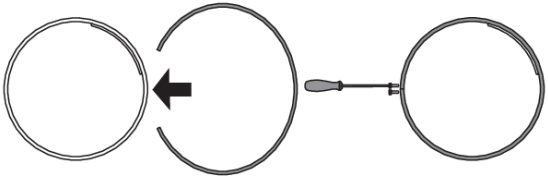

9

Rotate the door ring by 180°, install it onto the door, and fasten it with screws.

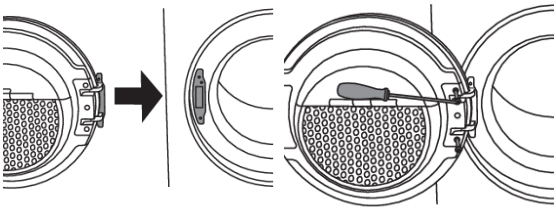

10

Install the door to the front and screw the door.

Evacuation of humid air

Use the supplied air exhaust hose to convey the humid air from the dryer is through an opening (ventilation system, window etc.).

Connecting the air exhaust hose to the dryer

The dryer allows three possibilities for air evacuation: on the rear, on the right, and on the left side. Upon delivery, the opening on the back is open and a connection fitting is installed on it (1).

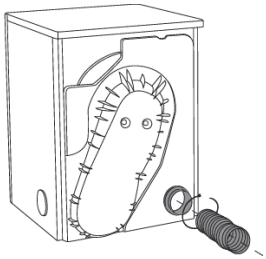

Side openings are covered with two caps. The machine comes supplied with an air exhaust hose (3) and two clamps (2).

Installation:

Slip the exhaust hose (3) over the connection fitting (1) and fasten it with a clamp (2).

Fitting the air exhaust hose to another opening:

Instead of on the rear opening, the air exhaust hose can be fitted on one of the side openings.

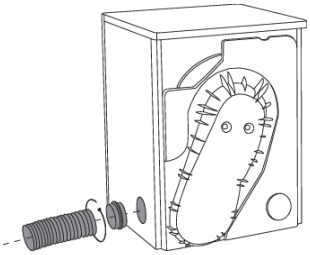

• Move the connection fitting from the rear opening (1) to the side opening. Then, connect the air exhaust hose and secure it with a clamp (2).

Table continued from last page

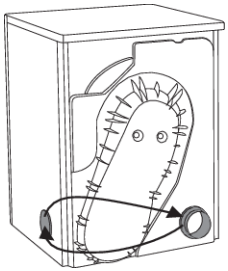

Use a cap to close the opening on the back of the dryer.

Connecting the air exhaust hose to a ventilation duct

The air exhaust hose should be routed in shortest and straightest possible way to the ventilation system opening (air evacuation duct). Use a clamp to attach the air exhaust hose to the ventilation opening. If the air exhaust hose is too long, cut it to length. The distance between the dryer and the air evacuation opening (ventilation opening, window) may not exceed 3 metres. Otherwise, moisture could accumulate in the air exhaust hose. All elbows should be at an angle that is equal to or smaller than 90°.

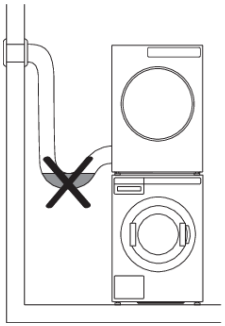

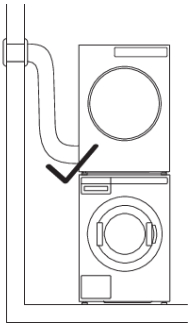

INFORMATION!

Do not evacuate the air from the dryer through channels used for appliances or devices that use natural gas or other fuels for their operation.

Selecting the room

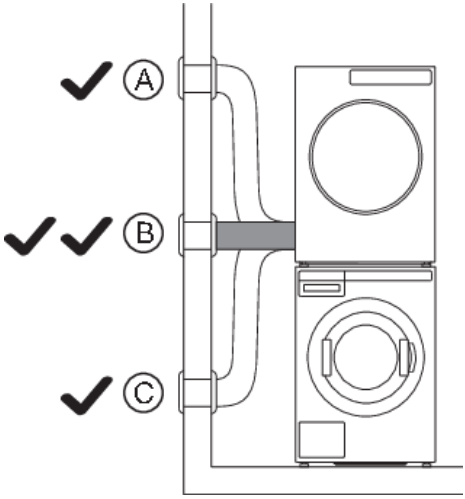

Place the appliance in a thoroughly ventilated room with a window or ventilation fan. If possible, connect the air exhaust hose so that it has no inclination, upwards (A) or downwards (C), but rather straight (B).

Extra equipment

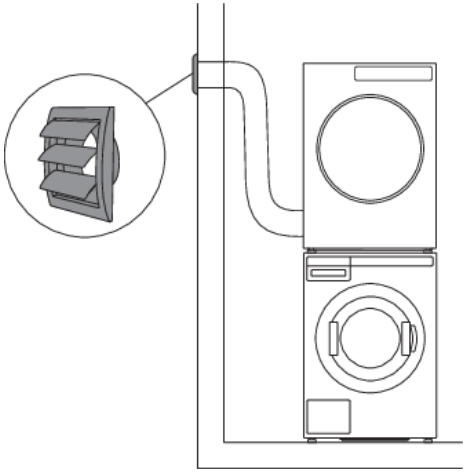

If the air exhaust hose is connected to an opening in the wall, influx of cool air may be prevented by installing a ventilation grille.

Table continued from last page

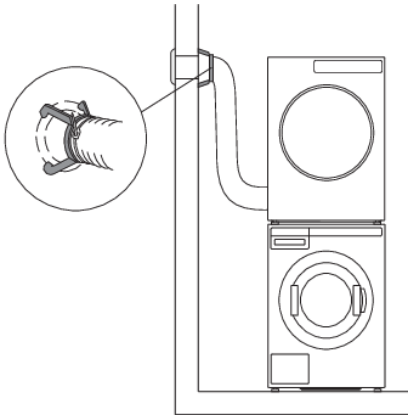

If there is only one ventilation opening in the room, an air lock should be installed.

This extra equipment can be purchased from your seller.

INFORMATION!

Please avoid:

- excessively long ventilation systems;
- multiple elbows or turns of the air exhaust hose;
- sharp elbows or turns of the air exhaust hose.

All three may reduce the ventilation system efficiency, extend the drying time, and increase power consumption.

Installing the air exhaust system

If several tumble dryers are connected to an air exhaust system, a non-return flap valve (R) **has to be** installed for each dryer. Installing a non-return flap valve will prevent air backflow into the dryer.

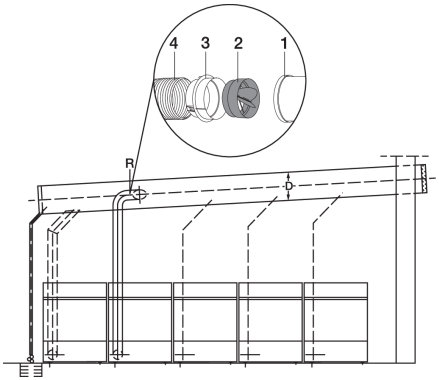

To install the non-return flap valve, some extra equipment is required:

1. Exhaust connection,
2. Non-return flap valve,
3. Adapter piece,
4. Flexible exhaust duct.

INFORMATION!

Non-return flap valve and the adapter piece are not supplied with the appliance and should be purchased extra at a specialized store.

WARNING!

Please ensure the non-return flap valve is cleaned regularly.

INFORMATION!

Up to 5 tumble dryers can be connected to an air exhaust system.

If between 2 and 5 tumble dryers are connected to an air exhaust system, the diameter of the exhaust duct (D) should be increased:

- 2–3 dryers → D × 1.25
- 4–5 dryers → D × 1.5

INFORMATION!

Maximum air flow in operation: 180 m^3/h

Connecting to the power mains

⚠ ELECTRIC SHOCK!

After installation, the dryer should stand still for two hours before it is connected to the power mains.

Connect the appliance to an earthed power outlet. After installation, the wall outlet should be freely accessible. The outlet should be fitted with an earth contact (in compliance with the relevant regulations).

If you have a tumble dryer with a 3 phase connection, the connection must be carried out by a qualified and authorized specialist.

Connection upon delivery

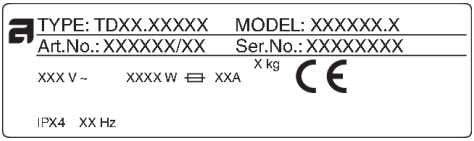

Information about your dryer is indicated on the rating (type) plate.

Use the type A differential current protection switch.

⚠ WARNING!

The dryer shall not be connected to the power mains using an extension cord.

INFORMATION!

Do not connect the tumble dryer to an electrical outlet intended for an electric shaver or hair dryer.

INFORMATION!

Any repair and maintenance pertaining to safety or performance should be done by trained experts.

Coin operation

(Only available in some models)

The machine is prepared for coin operation.

Owner/distributor can find detailed informations in Service manual.

Such installation must be carried out by a qualified professional.

The coin meter shall be able to short circuit two signal lines for periods of up to 10 minutes.

This will allow the user to load the appliance, choose a program and start the program after inserting the coins.

"Please pay to continue" appears on the display when the machine is started with the main power switch (by pressing on button Start).

This chapter includes several advices on how to prepare the laundry for drying.

Laundry sorting
Sort the laundry according to:

- type,
- fabric thickness.

For the most even drying, make sure the laundry is made of a similar material.

Clothing
1. Close the buttons, zips, and hook-and-loop fasteners, so that they do not damage the fabric.
2. Turn the pockets inside out.
3. Place very sensitive clothes in a special-purpose laundry bag.
   (The special purpose laundry bag is available as an optional accessory in general stores.)

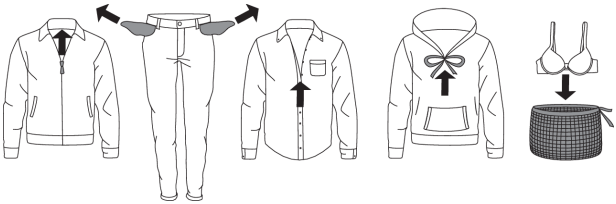

INFORMATION!

Laundry to be dried in the dryer should be spun at a minimum of 1000 rpm. Higher spinning speeds will save energy and cut drying time.

INFORMATION!

If you decide to dry only one large item, we recommend drying it separately from smaller items of laundry.

Laundry symbols
Observe the laundry symbols.

Textile maintenance symbols:

Washing		
Normal		Delicate
90	Max. washing temperature 90 °C	90
60	Max. washing temperature 60 °C	60
40	Max. washing temperature 40 °C	40
30	Max. washing temperature 30 °C	30
	Hand wash only	

Advices before drying

Table continued from last page

	Do not wash
 **Bleaching**	
	Bleaching in cool water
	Bleaching not allowed
 **Dry cleaning**	
	Dry cleaning with all agents
	Perchloroethylene R11, R113, petroleum
	Dry cleaning in kerosene, pure alcohol, and R113
	Dry cleaning not allowed
 **Ironing**	
	Ironing with a hot iron with a maximum temperature of 200 °C
	Ironing with a hot iron with a maximum temperature of 150°C
	Ironing with a warm iron with a maximum temperature of 110°C
	Ironing not allowed
 **Natural drying**	
	Drying on a flat surface
	Drying without prior spinning
	Drying on a clothes line or a hanger
 **Tumble drying**	
	Drying at high temperatures
	Drying at low temperatures
	Tumble drying not allowed

Materials (fabrics) suitable for drying in a tumble dryer

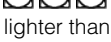 Material is suitable for tumble drying. Clothes dried in a tumble dryer will be softer and lighter than air-dried clothes.

INFORMATION!

The dryer does not cause any considerable wear of the fabric. The lint collected in the lint filter consists of dust and fabric fragments collected during the use of the laundry.

Materials (fabrics) that may not be dried in a tumble dryer

This symbol means that the material is not suitable for drying in a tumble dryer.

Never dry the following:

- clothing that was chemically cleaned (or dry-cleaned) at home,
- foam,
- glass fibres.

Drying process, step by step

STEP 1: Sort the fabrics
See chapter "Advices before drying"

INFORMATION!

Empty the pockets. Coins, nails etc. could damage the machine and the fabric.

STEP 2: Turn on the main switch



Turning on

Press the on/off button.

Switching off

Press the on/off button.

STEP 3: Open the dryer door and insert the laundry.
Open the dryer door towards you.

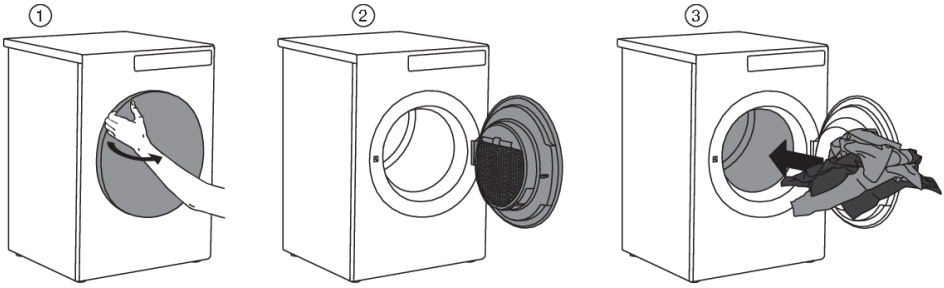

Place the laundry into the empty dryer drum. Make sure there aren't any other objects among the laundry, such a detergent ball.

Such objects could melt and cause damage to the dryer or your laundry.

Do not overload the drum! (See program table and observe your nominal load as indicated on the rating plate.)

If the dryer drum is overloaded, the laundry will be more wrinkled and perhaps unevenly dried.

STEP 4: Choose the drying program.
Choose the program by rotating the program selector knob in either direction. Confirm the program selection by pressing the button under the program.



Select the program based on the type and remaining moisture of the laundry you wish to dry.

Anticipated program duration is indicated on the display.

Choose between the following programs:

(owner/distributor can change parameters and rename the program)

	Programe (factory default program)	Max kg*	Description
+	AUTO EXTRA, Normal temp	8	Use this program for non-sensitive cotton laundry. After drying, it will be completely dry and ready to be stored in the cupboard.
+	AUTO EXTRA, Low temp	8	Use this program for cotton laundry. After drying, it will be completely dry and ready to be stored in the cupboard.
A	AUTO DRY, Normal temp	8	Use this program for non-sensitive cotton laundry. After drying, it will be completely dry and ready to be stored in the cupboard.
A	AUTO DRY, Low temp	8	Use this program for cotton laundry. After drying, it will be completely dry and ready to be stored in the cupboard.
	AUTO NORMAL, Normal temp	8	Use this program for non-sensitive cotton laundry of approximately the same thickness. After drying, it will be dry.
	AUTO NORMAL, Low temp	8	Use this program for cotton laundry of approximately the same thickness. After drying, it will be dry.
	AUTO HAND IRON, Normal temp	8	Use this program for cotton laundry. After drying, hand ironing is required.
	AUTO HAND IRON, Low temp	8	Use this program for sensitive cotton laundry. After drying, hand ironing is required.
	AUTO MACHINE IRON, Normal temp	8	Use this program for cotton laundry. After drying, machine ironing is required.
	AUTO MACHINE IRON, Low temp	8	Use this program for sensitive cotton laundry. After drying, machine ironing is required.
	MIX DRY	3,5	This program is used for synthetic or mixed fibre fabrics, such as multi-functional sport clothes. After drying, ironing is not required.
	MIX IRON	3,5	This program is used for synthetic or mixed fibre fabrics. After drying, ironing is required.

Table continued from last page

	Programe (factory default program)	Max. kg*	Description
	TIME 80 min	4	Cycle will stop when set time is reached. The time program is suitable for small loads.
	TIME 60 min	4	Cycle will stop when set time is reached. The time program is suitable for small loads.
	TIME 40 min	4	Cycle will stop when set time is reached. The time program is suitable for small loads.
	TIME 20 min	4	Cycle will stop when set time is reached. The time program is suitable for small loads.
	AIRING 60 min	2	Use this program to just refresh or soften clothing.

* Max. kg dry load

INFORMATION!

If your laundry is not dried to the desired dryness level, use a more suitable programme.

STEP 5: Choosing the program settings

Using the program settings, the drying programs can be further adjusted to your wishes. See chapter: SETTINGS.

Only appliance owner/distributor may change the settings!

Some programme settings may not be available for your selected programme.

Delay Start

In the submenu of the selected program, you can set the start delay when you want the drying program to start after a certain time (from 1 hour to 100 hours, from the time you press the **Start** / Pause button). The estimated time until the end of drying will be displayed.

Use the program selector knob to set from 1 h to 100 hours in 1-hour steps.

Press the button under the selected time/duration to confirm the setting.

Press the **Start**button to start. When the countdown reaches zero, the selected drying program will start automatically.

To cancel the start delay, press the button Cancel.

Then press the Start button to start the program.

During the countdown to the delayed start, the display will switch off after 5 minutes.

Use the program selector knob or press any button, to reactivate it. The countdown to the start of the drying cycle will be displayed.

Display will switch on 1 minute before the start of the drying cycle.

After the countdown, drying time will be indicated on the display unit.

STEP 6: Close the door and start the drying process.
Close the dryer door and press the **Start**/Pause button.



▶ Start (pressed briefly – start/resume)

❚❚ Pause (short press of the button - pause)

Stop (press and hold for 3 seconds – stop or cancel)

Remaining time

Depending on the selected programme and load, anticipated drying time will be displayed in hours and minutes.

Actual drying time will depend on the selected program, load, type of laundry, spinning rate etc.

Actual drying time may be longer or shorter than initially displayed.

Pausing, stopping or changing the program

To pause a program, briefly press the Start/Pause button.

To resume the program, press the **Start**/Pause button again.

The drying program may also be paused by opening the dryer door.

To resume the programme, simply close the door and press the **Start**/Pause button.

To stop and cancel the drying program, press the Start/Pause button and hold it for 3 seconds.

The selected program will be stopped and the cooling stage will begin. Cooling time depends on the selected program.

Only after the cooling is complete, can you use the program selector knob to select a new program and press the **Start**/Pause button.

⚠ WARNING!

A drying program can be paused using the ON/OFF button.

The tumble dryer will switch off.

STEP 7: End of program

After the end of the drying program, the display will indicate that the drying has been finished.

If you have selected the "anti-crease" option, the dryer will continue to operate after the end of the drying cycle.

Open the door towards you and remove the laundry from the dryer.

Clean the net filter in the door (see chapter "Cleaning and maintenance").

Make sure the dryer drum is empty, then close the door.

5 minutes after the end of the programme or last activation, the display will switch off to standby mode in order to save power.

The display will light up again if you press the ON/OFF button or open the dryer door.

INFORMATION!

After each drying cycle, clean the net filter in the door. See chapter "Cleaning and maintenance".

HOT SURFACE!

A clogged net filter may result in activation of the automatic overheating switch-off device. Clean the filter, wait for the machine to cool down, and try running it again. If the dryer still fails to start, call a service technician.

WARNING!

After the drying process, unplug the dryer power cord from the power outlet.

If you have a tumble dryer with a 3-phase connection, do not pull the plug out of the power outlet.

Only appliance owner/distributor may change the settings!

(owner/distributor should check Service manual)

On display	Setting	Description
Cleaning the filter	On/Off	
Cleaning the door filter in the door	1 --> 10	
Cleaning of water condenser	10 --> 100	(step 10)
Condensed water	Drain/Tank	
Payment system	On/Off	
Heater 2 activation	On/Off	
Change program	On each program (some settings cannot be set on some programs)	By changing settings it is possible to create and customize your own program. Program can be renamed!
• Extra dry	0 --> 3	
• Anti-crease	Switching on, (1h --> 4h)	
• Save program	Override existing/Save as new	
Time program		
• Time program 80 min	20 --> 240 min	
• Time program 60 min	20 --> 240 min	
• Time program 40 min	20 --> 240 min	
• Time program 20 min	20 --> 240 min	
• Save program	Override existing/Save as new	
Child Lock	On/Off	
Programmes		Selected program will be shown on display
Set Language	Select your language - press the button under the flag	• Select language: by rotating the program selector knob • Confirm language: by pressing button under the country flag

Table continued from last page

On display	Setting	Description
Temporary language selection	On/Off	(from 0 to 5) You can select up to 5 languages, which will be available in the main menu.
Sound setting	0 --> 5	
Display settings:		
• Brightness	1 --> 5	
• Display the logo	On/Off	
Standby mode	Normal/No standby	
Detailed view	On/Off	
Demo mode	On/Off	
Start delay	On/Off	1h --> 100h
Time/Icon mode	Time/Icon	
ID machine	0 --> xxx	
WiFi settings		By turning WiFi module On, the energy consumption will increase in standby mode.

SOUNDS
(depending on the model)

INFORMATION!

In the initial stage of drying or during drying, the compressor and the pump may cause noise which, however, does not affect the dryer operation.

Humming sound: this is the sound of the compressor unit. The level of noise depends on the program and the drying stage.

Whirring sound: from time to time, the compressor unit is ventilated.

Pumping or liquid flowing sound: the pump is pumping the condensate into the condensate tank.

Clicking sound: clicking noise is caused by automatic cleaning of the heat exchanger (compressor).

Rustling water sound: can be heard during automatic cleaning.

Rattling sound: can be heard during drying if laundry has any hard parts (buttons, zippers etc.)

INFORMATION!

Before cleaning, make sure to switch off the appliance and disconnect it from the power mains (unplug the power cord from the outlet).

Cleaning the door net filter in the door

Before cleaning, make sure to switch off the appliance and disconnect it from the power mains (unplug the power cord from the outlet).

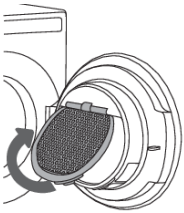

1

Lift the net filter cover.

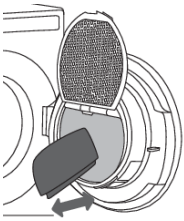

2

By hand or a cloth drag the net filter to remove the lining of fibers and threads.

NOTE!

The door net filter may feel quite loose when cleaning/removing fibers and threads. This is normal because of large net filter area in combination with high working temperatures inside the tumble dryer.



3

If necessary, clean the net filter housing and door gasket as well.

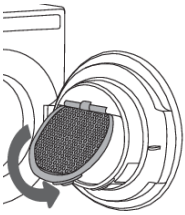

4

Close the net filter cover.

Table continued from last page

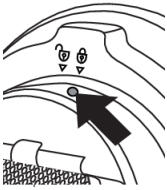

5

If it is necessary to clean the net filter from the back, unscrew the screw and turn the filter from the locked to the unlocked position. Pull out the entire filter unit and clean it thoroughly, and return the filter unit to its original position after cleaning. Turn the filter from the unlocked to the locked position and tighten the screw.

INFORMATION!

Make sure you do not pinch your fingers with the filter cover.

INFORMATION!

Clean the door net filter after each drying cycle.

INFORMATION!

Never operate without a door net filter or if the door net filter is damaged.

Cleaning the appliance exterior

Clean the appliance exterior and the display unit using a soft damp cotton cloth and water. **Do not use solvents or abrasive cleaners that could damage the appliance** (please observe the recommendations and warnings provided by the manufacturers of the cleaning agents).

Wipe all parts of the dryer with a soft cloth until dry.

INFORMATION!

Keep the area around the dryer clean and cool. Dust, heat and humidity will extend the drying time.

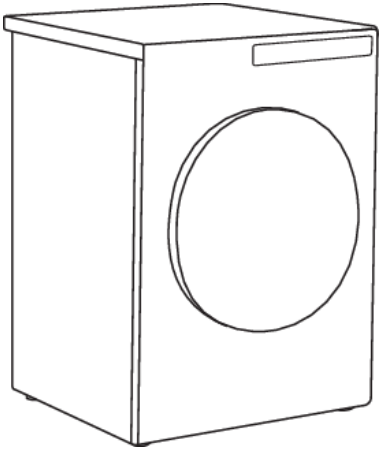

INFORMATION!

Always disconnect the dryer from the power mains before cleaning.

In the case of a 3 phase connection of the appliance, switch off the main socket switch.

Errors – what to do?

Disturbances from the environment (e.g. the power grid) may result in various error reports (see Troubleshooting table). In such case:

- Switch off the appliance, wait for 1 minute, switch the appliance back on, and repeat the drying programme.
- If the error persists, call an authorized service center.
- You will be able to solve most of the **problems** in appliance operation by yourself (see below Troubleshooting table).
- **Repairs** may only be carried out by an adequately trained person.
- Repair or any warranty claim resulting from incorrect connection or use of the dryer shall not be covered by the warranty. In such cases, the costs of repair shall be charged to the user.

INFORMATION!

The warranty does not cover the errors or failures resulting from disturbances from the environment (lightning strike, power grid failures, natural disasters etc.).

Problem/error	Cause	What to do?
The machine will not start.	• The main switch is not switched on.	• Check whether the main switch is on.
	• There is no voltage in the power outlet.	• Check the fuse. • Check if the power cord plug is correctly inserted into the power outlet.
There is voltage in the outlet, but the drum does not spin ... **The dryer does not work.**	• Programme was not started in accordance with the instructions.	• Re-read the instructions for use again.
	• Door might be open.	• Check if the door is closed properly.
	• The condensate tank is full (only applies to condensation dryer and the dryer with a heat pump).	• Empty the condensate tank (see section "CLEANING AND MAINTENANCE") (only applies to condensation dryer and the dryer with a heat pump).
	• Delayed start might be activated.	• To cancel the Delayed Start option, press 5 the Skip button.
The machine stops operating completely during a programme.	• The door lint filter may be clogged. As a result, the temperature in the dryer rises, which in turn causes overheating, and the dryer switches off.	• Clean the door net filter (see chapter "CLEANING AND MAINTENANCE"). • Wait for the machine to cool down, and try running it again. If the dryer still fails to start, call service centre.

Table continued from last page

Problem/error	Cause	What to do?
Laundry not dried or drying takes too long.	• Filters are not clean.	• Clean the filters (see chapter "CLEANING AND MAINTENANCE").
	• Dryer is placed in a closed room; room that is too cold; or room that is too small and the air overheats as a result.	• Make sure there is adequate supply of fresh air to the dryer; for example, open the door and/or window. • Check if the temperature in the room where the dryer is installed is too high or too low.
	• Laundry was not sufficiently wrung or spun.	• If the load is still wet after completed drying cycle, an appropriate drying programme should be run again (after cleaning filters).
	• Amount of laundry dried in the appliance is too large or insufficient.	• Use a suitable programme or extra functions.
	• Laundry (such as bedding) gets tangled into large balls.	• Close the buttons or zippers on the laundry before drying. Select a suitable program. • After the drying process, loosen the laundry and select an additional drying program (e.g. timed drying program).
Unevenly dried laundry.	• Laundry of varying types and thickness, and excessive amount of laundry.	• Make sure you have sorted the laundry by type and thickness, whether you have added a suitable amount of laundry to the drum, and whether you have selected a suitable programme.
A slight hitting noise appears.	• If the dryer is out of use for a long period of time, the same points of load-bearing elements or components are under stress for a long time, causing temporary deformation.	• The noise will subside without any intervention.
The door opens during drying.	• Excessive load on the door (too much laundry in the drum).	• Reduce the amount of laundry.

Failure display

In case of a failure while a program is in progress, the relevant Error X is indicated on the display unit.



Press and hold the INFO button to display the error description.

Switch off the dryer and turn it back on.

Errors indicated on the display unit (depending on the model) may include the following:

Problem/error	Error indication on the display	What to do?
E0	Control unit failure.	Control unit failure. Call service centre.
E1	Thermistor error.	Temperature sensor failure. Call service centre.
E2	Communication error.	Communication error. Call service centre.
E6	Relay failure.	Control unit failure. Call service centre.
E7	Door failure.	Control unit failure. Call service centre.
E8	Button failure.	Control unit failure. Call service centre.
E9	PB/UI software versions are not compatible.	Call service centre.
E10	EADBS communication error.	Call service centre.
E11	Motor communication error.	Call service centre.

INFORMATION before, during, and after the programme

(depending on the model)

Error indication on the display	What to do?
EN: Please close the door before pressing start.	Close the dryer door before starting or resuming the program.
EN: Option not available at this phase of cycle.	This option is not available. Select an option that is still available.
EN: Cycle was interrupted by power failure. Please resume.	Press the **Start**/Pause button to restart or resume the program.
EN: Clean door filter.	See chapter "CLEANING AND MAINTENANCE".
EN: Child lock is on. Press buttons for 3 sec to unlock.	See chapter "SETTINGS".

If you have encountered a problem that you cannot resolve, please contact your nearest service centre for professional help – details available at www.asko.com. Our website also has information about the availability of spare parts and what you can repair yourself.

You will need to provide the details stated on the serial number plate. Include the article number and the serial number.

Please note that non-professional repairs may pose a safety risk to the user and affect the warranty.

In European Union Member States and European Economic Area States, consumers have the right to choose, at their own discretion, between an authorized repairer and an independent repairer. However, where the consumer chooses an independent repairer, the seller and/or the manufacturer shall not be liable for any product safety risks or infringements of intellectual property rights resulting from interventions carried out by the independent repairer, nor shall they be responsible for any loss of guarantee or warranty rights arising from objective or legitimate reasons attributable to improperly performed repairs.

Before calling a service center

See the chapters "*Troubleshooting and "Cleaning and maintenance*" and see if you can resolve the problem yourself.

When you contact a service centre, please state the model (1), type (2), and serial number (3) of your dryer.

Model, type, and serial number are indicated on the rating (type) plate located on the interior side of the dryer door.

QR and AUID code are located on the inside of the drying machine door as well.

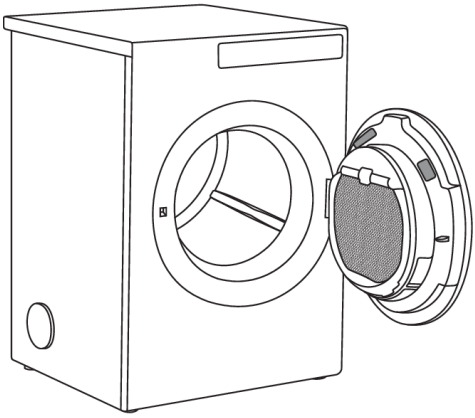

⚠ WARNING!

In case of a failure, only use approved spare parts by authorized manufacturers.

⚠ WARNING!

Repair or any warranty claim resulting from incorrect connection or use of the dryer shall not be covered by the warranty. In such cases, the costs of repair shall be charged to the user.

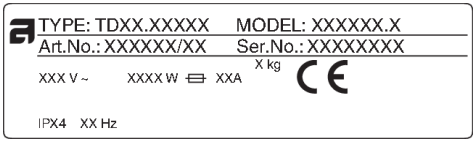

Right to Repair

For sales contracts concluded with consumers within European Union Member States and European Economic Area States, on or after 31 July 2026, according to the Right to Repair Directive ((EU) 2024/1799), the following consumers' rights apply.

- Right to choose repair
- Extension of the legal guarantee

This information reflects the minimum level of consumer protection established by the Right to Repair Directive. EU Member States may introduce more extensive consumer rights at the national level. Where national legislation provides a higher level of protection, such national provisions shall prevail.

Additional information provided by the manufacturer is available at: www.asko.com.

Technical information

Height	850 mm
Width	595 mm
Depth	769 mm
Weight (net)	43 kg
Drum volume	145 l
Maximum drying load	See rating plate
Rated power	See rating plate
Drum material	Stainless steel
Housing material	Hot-dip galvanized and powder coated sheet metal, or stainless steel sheet.

The table indicates the power consumption and time values for drying of a test batch of laundry with various loads and after spinning at various rates, consistently with the EN61121.

The following requirements apply to the consumption values specified below.

Inlet air temperature	room temperature
Inlet air humidity	50–60%
Drying temperature	Normal

TDC1485VI

Program	Amount	Spinning speed (rpm)	Power consumption, approximately (kWh)*	Program duration, approximately (min)*
AUTO EXTRA, Normal temp	⊖	1400	4,75	80
AUTO EXTRA, Low temp	⊖	1400	4,75	133
AUTO DRY, Normal temp	⊖	1400	4,14	70
AUTO DRY, Low temp	⊖	1400	4,15	110
AUTO NORMAL, Normal temp	⊖	1400	3,80	56
	⊖	1000	4,62	68
AUTO NORMAL, Low temp	⊖	1400	3,75	90
AUTO HAND IRON, Normal temp	⊖	1400	3,45	53
AUTO HAND IRON, Low temp	⊖	1400	3,45	80
AUTO MACHINE IRON, Normal temp	⊖	1400	2,72	45
	⊖	1000	3,40	52
AUTO MACHINE IRON, Low temp	⊖	1400	2,75	67
MIX DRY	⊖	1200	1,70	30
MIX IRON	⊖	1000	1,30	20

⊖	full load (8 kg)

Table continued from last page

⊖	partial load

* Due to deviations in terms of type and amount of laundry, spinning, power supply oscillation, and environment temperature and humidity, the values measured at the user may differ from the one stated in the table.

Disposal / recycling of packaging



Our product packaging is made of environmentally friendly materials that can be recycled, disposed of, or destroyed without any hazard to the environment. To this end, packaging materials are labelled appropriately.

The symbol on the product or its packaging indicates that the product should not be treated as normal household waste. Take the product to an authorized collection centre for waste electric and electronic equipment processing.

When disposing of an appliance, at the end of its useful life, remove all power cords and destroy the door latch and switch to prevent the door from locking or latching (child safety).

Correct disposal of the product will help prevent any negative effects on the environment and health of people which could occur in case of incorrect product removal. For detailed information on removal and processing of the product, please contact the relevant authority in charge of waste management, your waste disposal service, or the store where you bought the product.



1. Sort the fabrics

Sort the fabric by type and by how heavily soiled the laundry is. Observe the drying symbols on the laundry labels. Close the zippers, hook-and-loop fasteners and buttons.

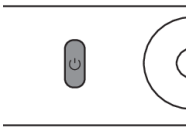

2. Switch on the main ON/OFF switch



3. Open the dryer door and insert the laundry.

Before doing so, make sure the drum is empty.

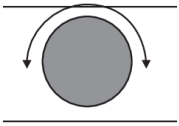

4. Choose the drying program

Turn the program selector knob to the desired drying program.

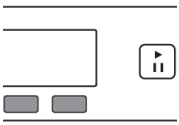

5. Choose the program settings

Program settings can be set for some programs. See chapter: SETTINGS

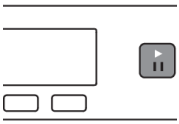

6. Close the dryer door and press the Start/Pause BUTTON.

Anticipated drying time, in hours and minutes, will be indicated on the display.

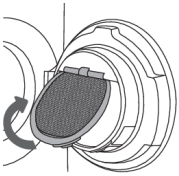

7. End of program

Open the door and remove the laundry from the dryer.

Clean the filters. See chapter "CLEANING AND MAINTENANCE".

Close the door.

Switch off the main on/off switch.

Unplug the dryer power cord from the power outlet (unless you have a tumble dryer with a 3phase connection)

ASKO

Gorenje d.o.o., Partizanska 12, 3320 Velenje, Slovenija • www.asko.com

802431-a15

CE

We reserve the right to make changes.